| A10 | SILVER J1 | L1 | M3 | B1 | E | D | OPK |
|---|---|---|---|---|---|---|---|
| Ø5 MM X 40 MM 8 X | Ø 10 MM X 44 MM 6X | Ø 6 MM X 32 MM 16 X | Ø 6 MM X 13 MM 2 X | Ø6 MM X 30 MM 8 X | Ø12 MM X 10 MM 10 X | 10 X | 1 X |

BLACK J

Ø 10 MM X 44 MM 4X

1

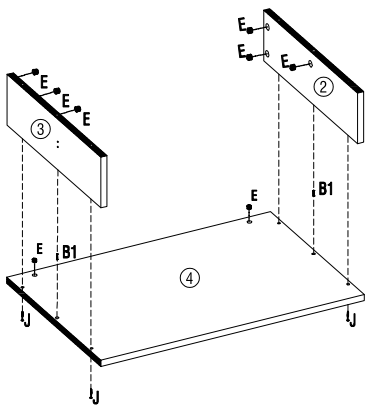


2

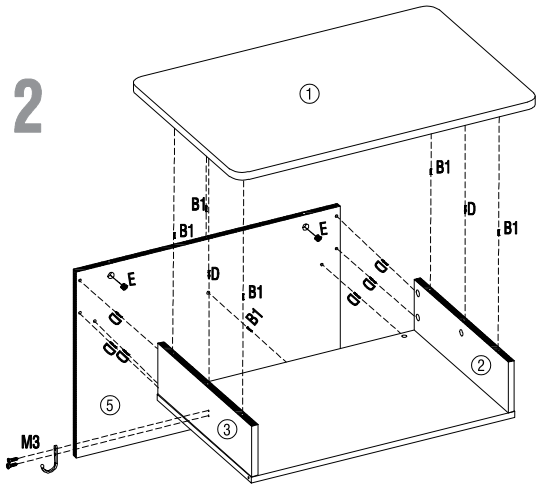


3

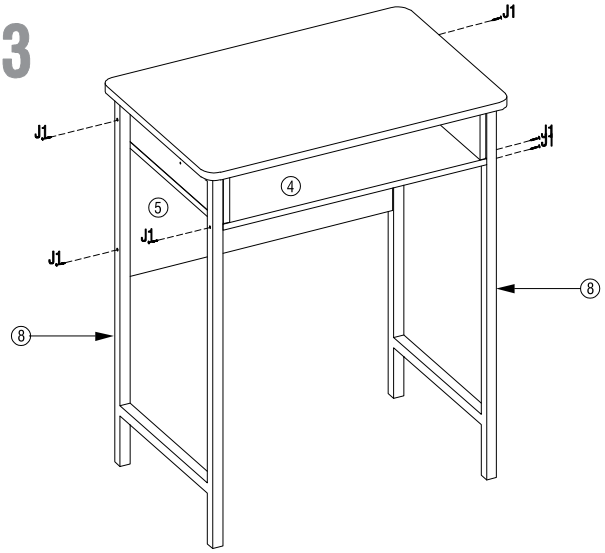


4

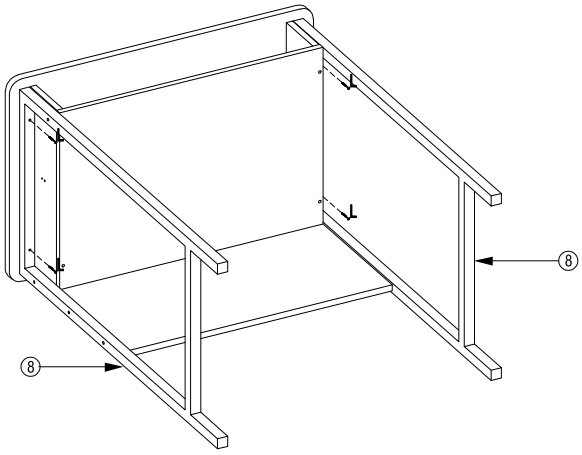


5

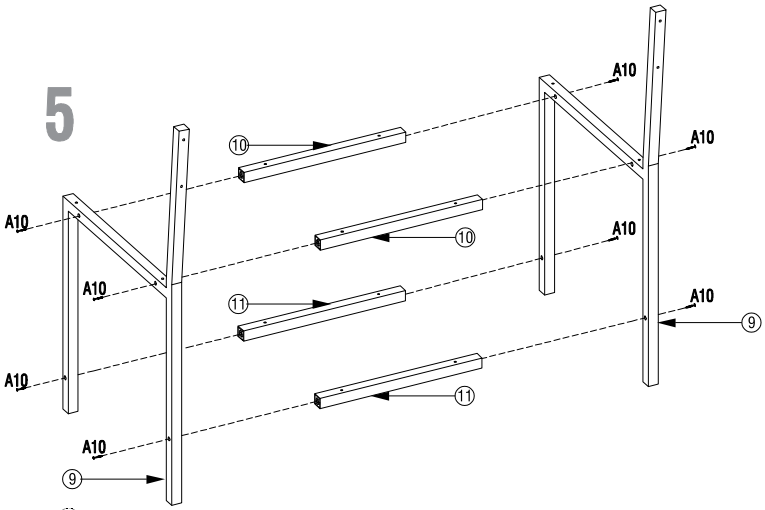


6

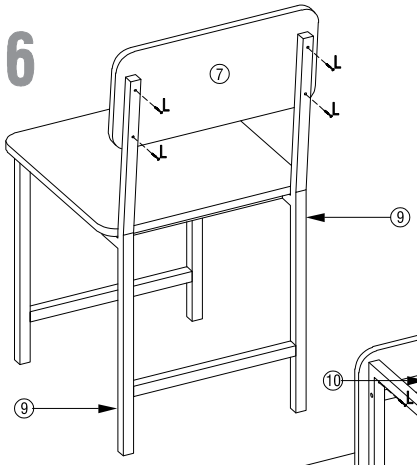


7

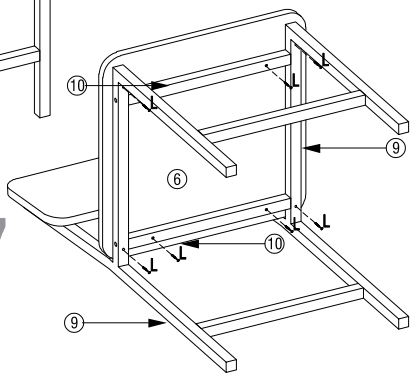


agio

# EDISON STUDENT DESK 60M